INSTRUCTION MANUAL

4 CHANNEL
COLOR QUAD PROCESSOR

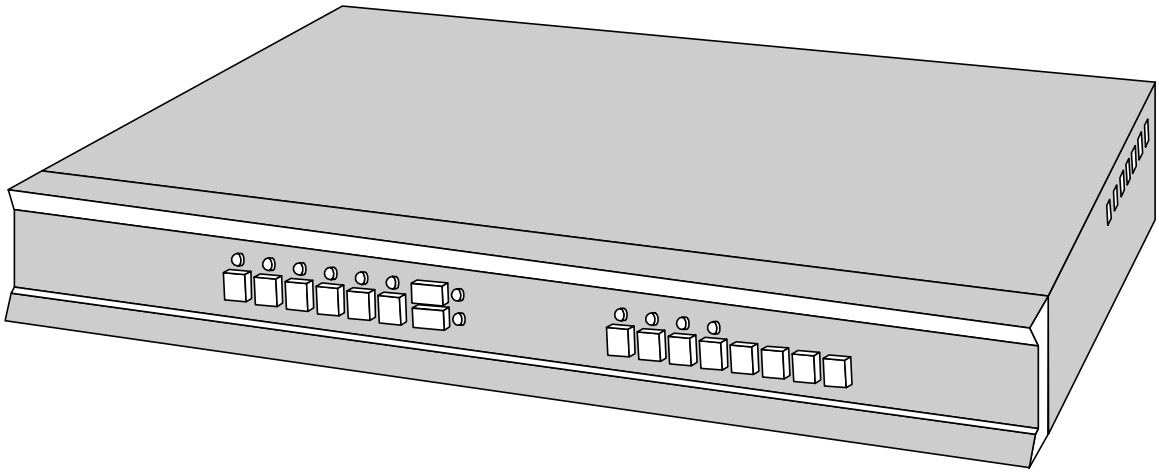

Please read this manual thoroughly before use, and keep it handy for future reference.

ALL RIGHTS RESERVED. NO PART OF THIS PUBLICATION MAY BE REPRODUCED BY ANY MEANS WITHOUT WRITTEN PERMISSION FROM HITRON SYSTEMS

THE INFORMATION IN THIS PUBLICATION IS BELIEVED TO BE ACCURATE IN ALL RESPECTS. HOWEVER, WE CANNOT ASSUME RESPONSIBILITY FOR ANY CONSEQUENCES RESULTING FROM THE USE THEREOF. THE INFORMATION CONTAINED HEREIN IS SUBJECT TO CHANGE WITHOUT NOTICE. REVISIONS OR NEW EDITIONS TO THIS PUBLICATION MAY BE ISSUED TO INCORPORATE SUCH CHANGES.

WARNING

- TO REDUCE THE RISK OF FIRE OR ELECTRIC SHOCK, DO NOT EXPOSE THIS PRODUCT TO RAIN OR MOISTURE.
- DO NOT INSERT ANY METALLIC OBJECT THROUGH VENTILATION GRILLS.

CAUTION

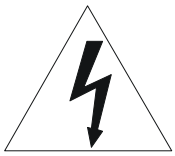

WARNING

RISK OF ELECTRIC SHOCK
DO NOT OPEN

WARNING: TO REDUCE THE RISK
OF ELECTRIC SHOCK,
DO NOT REMOVE COVER (OR BACK).
NO USER-SERVICEABLE PARTS INSIDE.
REFER SERVICING TO
QUALIFIED SERVICE PERSONNEL.

EXPLANATION OF GRAPHICAL SYMBOLS

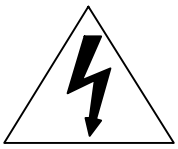

The lightning flash with arrowhead symbol, within an equilateral triangle, is intended to alert the user to the presence of uninsulated " dangerous voltage" within the product's enclosure that may be of sufficient magnitude to constitute a risk of electric shock to persons.

The exclamation point within an equilateral triangle is intended to alert the user to the presence of important operating and maintenance (servicing) instruction in the literature accompanying the product.

FCC COMPLIANCE STATEME

INFORMATION TO THE USER: THIS EQUIPMENT HAS BEEN TESTED AND FOUND TO COMPLY WITH THE LIMITS FOR A CLASS A DIGITAL DEVICE, PURSUANT TO PART 15 OF THE FCC RULES. THESE LIMITS ARE DESIGNED TO PROVIDE REASONABLE PROTECTION AGAINST HARMFUL INTERFERENCE WHEN THE EQUIPMENT IS OPERATED IN A COMMERCIAL ENVIROMENT. THIS EQUIPMENT GENERATES, USES, AND CAN RADIATE RADIO FREQUENCY ENERGY AND IF NOT INSTALLED AND USED IN ACCORDANCE WITH THE INSTRUCTION MANUAL, MAY CAUSE HARMFUL INTERFERENCE TO RADIO COMMUNICATIONS. OPERATION OF THIS EQUIPMENT IN A RESIDANTIAL AREA IS LIKELY TO CAUSE HARMFUL INTERFERENCE IN WHICH CASE THE USER WILL BE REQUIRED TO CORRECT THE INTERFERENCE AT HIS OWN EXPENSE.

CAUTION: CHANGES OR MODIFICATIONS NOT EXPRESSLY APPROVED BY THE MANUFACTURER COULD VOID THE USER'S AUTHORITY TO OPERATE THE EQUIPMENT.

THIS CLASS A DIGITAL APPARATUS COMPLIES WITH CANADIAN ICES 003

CET APPAREIL NUMÉRIQUE DE LA CLASSE A EST CONFORME Á LA NORME NMB003 DU CANADA.

CE COMPLIANCE STATEMENT

WARNING: THIS IS A CLASS A PRODUCT, IN A DOMESTIC ENVIRONMENT THIS PRODUCT MAY CAUSE RADIO INTERFERENCE IN WHICH CASE THE USER MAY BE REQUIRED TO TAKE ADEQUATE MEASURES.

USERS OF THE PRODUCT ARE RESPONSIBLE FOR CHECKING AND COMPLYING WITH ALL FEDERAL, STATE, AND LOCAL LAWS AND STATUTES CONCERNING THE MONITORING AND RECORDING OF VIDEO AND ODIO SIGNALS. CYSYS SHALL NOT BE HELD RESPONSIBLE FOR THE USE OF THIS PRODUCT IN VIOLATION OF CURRENT LAWS AND STATUTES.

IMPORTANT SAFEGUARDS

1. READ INSTRUCTIONS – All the safety and operating instructions should be read before the appliance is operated.

2. RETAIN INSTRUCTIONS – The safety and operating instructions should be retained for future reference.

3. HEED WARNINGS – All warnings on the unit and in the operating instructions should be adhered to.

4. FOLLOW INSTRUCTIONS – All operating and use instructions should be followed.

5. CLEANING – Unplug the unit from the outlet before cleaning. Do not use liquid cleaners or aerosol cleaners. Use a damp cloth for cleaning.

6. ATTACHMENTS – Do not use attachments not recommended by the product manufacturer as they may result in the risk of fire, electric shock or injury to persons.

7. WATER AND MOISTURE – Do not use this unit near water or in an unprotected outdoor installation, or any area which is classified as a wet location.

8. ACCESSORIES – Do not place this product on an unstable cart, stand, tripod, bracket, or table. The product may fall, causing serious injury to a child or adult, and serious damage to the equipment. Use only with a cart, stand, tripod, bracket, or table recommended by the manufactured, or sold with the product. Any mounting of the product should follow the manufacturer's instructions and should use a mounting accessory recommended by the manufacturer. Wall or shelf mounting should follow the manufacturer's instructions and should use a mounting kit approved by the manufacturer.

9. A product and cart combinations should be moved with care. Quick stops, excessive force, and uneven surfaces may cause the product and cart combination to overturn.

10. VENTILATION – Slots and openings in the cabinet and the back or bottom are provided for ventilation and to ensure reliable operation of the equipment and to protect it from overheating. These openings must not be blocked or covered. The openings should never be blocked by placing the product on a bed, sofa, rug, or other similar surface. Equipment should never be placed near or over a radiator or heat register. This product should not be placed in a built-in installation, such as a bookcase unless proper ventilation is provided or the manufacturer's instructions have been adhered to.

11. POWER SOURCES – This product should be operated only from the type of power source indicated on the marking label. If you are not sure of the type of power supplied to your home, consult your product dealer or local power company. For product designed to operate from battery power or other sources, refer to the operating instructions.

12. GROUNDING OR POLARIZATION – The power supply supplied with this unit may be equipped with a polarized alternating-current line plug (a plug having one blade wider than the other). This plug will fit into the power outlet only one way. This is a safety feature. If

you are unable to insert the plug fully into the outlet, try reversing the plug. If the plug should still fail to fit, contact your electrician to replace your obsolete outlet. Do not defeat the safety purpose of the polarized plug.

13. OVERLOADING – Do not overload outlets and extension cords as this can result in a risk of fire or electric shock.

14. POWER CORDS PROTECTION – Power supply cords should be routed so that they are not likely to be walked on or pinched by items placed upon or against them, paying particular attention to cords and plugs, convenience receptacles, and the point where they exit from the monitor.

15. OBJECT AND LIQUID ENTRY – Never push objects of any kind into this unit through openings as they may touch dangerous voltage points or short-out parts that could result in a fire or electric shock. Never spill liquid of any kind on the product.

16. SERVICING – Do not attempt to service this unit yourself as opening or removing covers may expose you to dangerous voltage or other hazards. Refer all servicing to qualified service personnel.

17. DAMAGE REQUIRING SERVICE – Unplug the unit from the outlet and refer servicing to qualified service personnel under the following conditions:

    a. When the power-supply cord or the plug is damaged.

    b. If liquid has been spilled, or objects have fallen into the unit.

    c. If the video product has been exposed to rain or water.

    d. If the unit does not operate normally by following the operating instructions. Adjust only those controls that are covered by the operating instructions as an improper adjustment of other controls may result in damage and will often require extensive work by a qualified technician to restore the unit to its normal operation.

    e. If the unit has been dropped or the enclosure has been damaged.

    f. When the unit exhibits a distinct change in performance – this indicates a need for service.

18. REPLACEMENT PARTS – When replacement parts are required, be sure the service technician has used replacement parts specified by the manufacturer or have the same characteristics as the original part. Unauthorized substitutions may result in fire, electric shock or other hazards.

19. SAFETY CHECK – Upon completion of any service or repairs to this unit, ask the service technician to perform safety checks to determine that the unit is in proper operating condition.

20. LIGHTNING AND POWER LINE SURGES – For added protection of this unit during a lighting storm, or when it is left unattended and unused for long periods of time, unplug it from the wall outlet and disconnect the cable system. This will prevent damage to the unit due to lighting and power-line surges.

21. HEAT – The product should be situated away from the heat sources such as radiators, heat registers, stoves, or other products (including amplifiers) that produce heat.

22. INSTALLATION – Do not install the unit in an extremely hot or humid location, or in a place subject to excessive dust or mechanical vibration. The unit is not designed to be waterproof. Exposure to rain or water may damage the unit.

23. WALL OR CEILINMG MOUNTING – The product should be mounted to a wall or ceiling only as recommended by the manufacturer.

TABLE OF CONTENTS

SECTION 1: INTRODUCTION 12
1.1 PRODUCT DESCRIPTION 12
1.2 FEATURES 12
SECTION 2: COLORS AND CONNECTIONS 13
2.1 FRONT PANEL CONTROLS 13
2.2 REAR PANEL CONNECTIONS 16
2.3 RS-485 CONNECTOR 17
2.4 REMOTE CONNECTOR PIN ASSIGNMENT 17
SECTION 3: INSTALLATION 18
3.1 BASIC INSTALLATION WITH A RECORDER 18
SECTION 4: SETUP AND PROGRAMMING 19
4.1 DISPLAY FORMATS 19
PIP1 Display 19
PIP2 Display 20
QUAD Display 22
Full Screen Display 22
4.2 VCR OPERATION 23
VCR Playback 23
VCR Output 23
VCR Zoom Display 23
4.3 FREEZE OPERATION 24
Freeze Display 24
4.4 ALARM MODE 25
Single Alarm and Multiple Alarms 25
VCR Mode Alarm 26
Video Loss Alarm 27
VCR Mode 28
Video Loss Alarm 28
Alarm Reset 28
4.5 CONNECTORS 28
Alarm Input 28
Alarm Output 28
Video loss Output 28

TABLE OF CONTENTS

SECTION 5: SETUP MODE 29
5.1 OVERVIEW 29
5.2 PASSWORD 29
5.3 MAIN MENU SETUP 30
5.4 LANGUAGE SETUP (MAIN MENU OPTION 1) 31
Menu Language 31
5.5 TIME AND DATE SETUP (MAIN MENU OPTION 2) 32
Date 32
Format 32
Date 33
Time 33
Display 33
5.6 CAMERA SETUP (MAIN MENU OPTION 3) 34
Camera Titles 34
Camera Disable 36
PIP Size 38
5.7 ALARM SETUP (MAIN MENU OPTION 4) 38
Alarm Menu 38
Alarm Input Menu 38
Input Options 39
Latch 39
Buzzer 40
Relay 40
Video Loss Alarm 41
Video Loss Alarm Latch 42
Video Loss Alarm Buzzer 42
Video Loss Alarm Relay 43
Alarm Display 43
Alarm Time 44
Hold Time 44
V-Loss Time 44
5.8 SEQUENCE (MAIN MENU OPTION 5) 45
Order 45
Dwell Time 45
5.9 PICTURE ADJUST (MAIN MENU OPTION 6) 46
Camera Select 46
Picture Adjust 46

TABLE OF CONTENTS

5.10 CONFIGURATION (MAIN MENU OPTION 7) 47
Password 47
Changing The Password 48
Factory Defaults 49
Key Lock 50
VCR Output 50
Remote Control 51
Alarm History 52
System 53

SECTION 6: REMOTE CONTROL 54

6.1 OVERVIEW 54
RS-232 and 54
RS-485 Data 54
RS-232 Connection 54
RS-485 Connection 54
Communication Protocol 54

6.2 REMOTE COMMAND SET 55

6.3 REMOTE CONNECTIONS 56
RS-232 56
RS-232 Transmitting Connector Pin Name 56
RS-485 57

SECTION 7: TROUBLESHOOTING AND MAINTENANCE 58

7.1 TROUBLESHOOTING 58

7.2 PREVENTIVE MAINTENANCE 58

SECTION 8: SPECIFICATION 59

8.1 GENERAL 59

8.2 ELECTRICAL 59

8.3 ALARM 60

8.4 FACTORY DEFAULTS 60

LIST OF FIGURES

FIGURE 1: FRONT PANEL CONTROLS 13
FIGURE 2: REAR PANEL CONNECTIONS 16
FIGURE 3: RS-485 CONNECTIONS 17
FIGURE 4: BASIC INSTALLATION WITH A RECORDER 18
FIGURE 5: PIP1 DISPLAYS 20
FIGURE 6: PIP2 DISPLAYS 21
FIGURE 7: FREEZE DISPLAYS 25
FIGURE 8: ALARM MODE DISPLAYS 26
FIGURE 9: ALARM MODE DISPLAYS 27
FIGURE 10: PASSWORD SCREEN 29
FIGURE 11: INCORRECT PASSWORD MESSAGE 29
FIGURE 12: MAIN MENU 30
FIGURE 13: MENU LANGUAGE 31
FIGURE 14: TIME, DATE MENU 32
FIGURE 15: CAMERA MENU 34
FIGURE 16: CAMERA TITLE MENU 34
FIGURE 17: CAMERA DISABLE MENU 36
FIGURE 18: “ DISABLED” CAMERAS (CAMERA PHYSICALLY ATTACHED TO SYSTEM) 37
FIGURE 19: “ DISABLED” CAMERAS (CAMERA NOT PHYSICALLY ATTACHED TO SYSTEM) 37
FIGURE 20: ALARM MENU 38
FIGURE 21: ALARM INPUT MENU 38
FIGURE 22: VIDEO LOSS ALARM MENU 41
FIGURE 23: ALARM INPUT MENU WHEN VCR OUTPUT IS QUAD 43
FIGURE 24: ALARM INPUT MENU WHEN VCR OUTPUT IS QUAD/PIP 43
FIGURE 25: ALARM TIME MENU 44
FIGURE 26: SEQUENCE MENU 45
FIGURE 27: OSD WHEN ADJUSTING QUADRANT 1 46
FIGURE 28: OSD WHEN ADJUSTING CAMERA 3 46
FIGURE 29: CONFIGURATION MENU 47
FIGURE 30: CHANGE PASSWORD SUCCESS 48
FIGURE 31: CHANGE PASSWORD FAILURE 48
FIGURE 32: REMOTE CONTROL MENU 51
FIGURE 33: ALARM HISTORY DISPLAYED 52
FIGURE 34: ALARM HISTORY CLEARED 52
FIGURE 35: RS-232 CONNECTION 56
FIGURE 36: RS-485 CONNECTION 57

SECTION 1: INTRODUCTION

1.1 PRODUCT DESCRIPTION

The COLOR QUAD PROCESSOR is a real-time 60/50 fields per second Color QUAD processor. This stand-alone unit offers advanced features such as zoom on playback of compressed images, sequential switching and time/date/titling overlays. It also offers a user-friendly on-screen programmable menu. Cameras can be viewed sequentially on alarm, full-screen, or in the QUAD mode.

1.2 FEATURES

The COLOR QUAD PROCESSOR offers the following features:

- Color QUAD Display
- Internal four camera Sequential Switcher Display
- PIP (Picture In Picture) Display
- Programmable camera skip in sequential mode
- Camera Enable/Disable feature by setup menu
- Quadrants and PIP assign function
- Full-Screen Display
- On-Screen Display
- Screen Freeze Capability (Quad / PIP Screen, VCR playback, VCR Zoom mode)
- Four Alarming Inputs, N.C or N.O
- Video Loss Alarm
- Video Loss Output (Logic Level Low)
- VCR Inputs and Outputs (BNC)
- Auto-terminating Camera In/Outputs
- Digital Zoom from a QUAD to Full Screen on VCR. Playback
- Selectable display (QUAD or Full Screen) on alarm
- Remote Control (RS-485, RS-232)
- Rack Mount Kit Included
- Key Lock / Menu Password enabled
- Menu Language: English, German, French, Italian, Spanish

SECTION 2: COLORS AND CONNECTIONS

2.1 FRONT PANEL CONTROLS

The front panel provides the primary operator interface with most operations using one or two button presses.

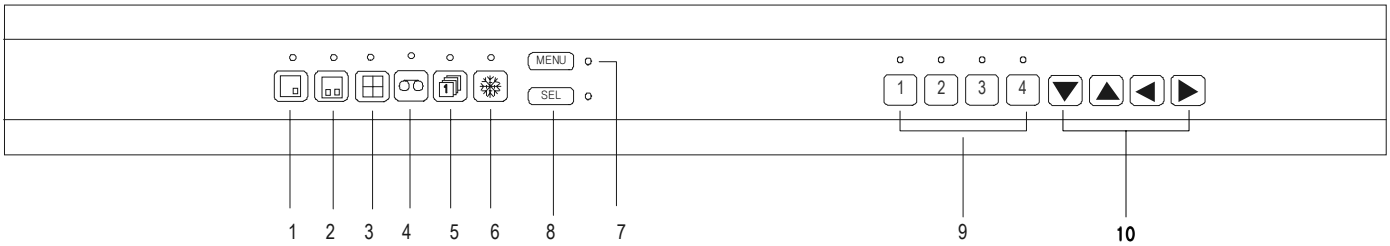

Figure 1: Front Panel Controls

ID	Function	Description
1	PIP1	Pressing PIP1 displays a full-screen "background" picture with a 1/9 size inset window. The default position of the inset window is the lower-right quadrant. When the unit is in PIP1 mode, the PIP1 LED and the displaying camera LEDs are lit. When alarms occur, pressing PIP1 stops all alarm operation and the screen displays current picture. *NOTE: When you set QUAD only in the VCR output option menu, the PIP1 button is disabled.* *NOTE: When the unit is in the VCR playback mode, the PIP1 button is disabled.*
2	PIP2	Pressing PIP2 displays a full-screen "background" picture with two 1/9 size inset windows. The default position of the inset windows is the bottom of the screen. When the unit is in PIP2 mode, the PIP2 LED and the displaying camera LEDs are lit. When alarms occur, pressing PIP2 stops all alarm operation and the screen displays current picture. *NOTE: When you set QUAD only in the VCR output option menu, the PIP2 button is disabled.* *NOTE: When the unit is in the VCR playback mode, the PIP2 button is disabled.*

2.1 FRONT PANEL CONTROLS, CONTINUED

ID	Function	Description
3	QUAD	Pressing **QUAD** places the unit in the QUAD mode. When the unit is in QUAD mode, the QUAD LED and the displaying camera LEDs are lit. When alarms occur, pressing QUAD stops all alarm operation and the screen displays current picture. *NOTE: When the unit is in the VCR playback zoom mode, the QUAD button returns to the VCR playback mode.*
4	VCR	Press **VCR** to place the unit into tape review mode allowing tape playback. To exit the VCR mode, press VCR again. When the unit is in the VCR mode, the VCR LED and the QUAD LED turn on. *NOTE: When alarms occur, pressing VCR stops all alarm operation and the screen displays current picture.*
5	SEQ	Pressing **SEQ** places the unit in the sequential switching mode. Pressing SEQ again exits the sequential switching mode. When the unit is in the SEQ mode, the SEQ LED is lit. The current displaying camera LEDs turn on and a small "s" is displayed on the lower right of the screen. Note: When alarms occur, pressing SEQ stops all alarm operation and the screen displays current picture. Note: When the unit is in the VCR Playback mode, the SEQ button is disabled.
6	FREEZE	Pressing FREEZE stops the current picture of PIP, QUAD, VCR playback, or VCR Zoom screen. Pressing FREEZE again unfreezes the image. When the unit is in the FREEZE mode, an "F" character blinks next to the titles of the frozen cameras. Note: When alarms occur, pressing this button stops all alarm operation and the screen displays current picture.

2.1 FRONT PANEL CONTROLS, CONTINUED

ID	Function	Description
7	MENU	Pressing MENU places the unit in the programmable Menu Setup mode. When in Menu Setup mode, pressing the MENU again exits this mode. It can also be pressed to return to an upper Menu from a Sub Menu. In the Menu Setup mode, the Menu LED is lit and any alarm cannot be detected. *NOTE: When alarms occur, pressing MENU stops all alarm operation and the screen goes to the Menu Setup mode.*
8	SEL (SELECT)	When the unit is in Menu Setup mode, SEL acts as a SET button. *NOTE: When alarms occur, pressing SEL stops all alarm operation and the screen displays current picture* SEL also enables secondary functions for particular buttons: ● SWAP: In the PIP mode, pressing PIP after pressing SEL performs the swap function. ● Camera Assign: In the PIP or QUAD mode, pressing camera button after pressing SEL assigns cameras to PIP or QUAD pictures.
9	CAM 1-4	All camera buttons will: ● Display the camera in the Full screen mode ● Unfreeze or freeze the image in freeze mode in the QUAD or PIP mode. Only Camera 1 through 4 buttons will zoom the quadrant image to Full screen when the unit is in VCR playback mode. *NOTE: When alarms occur, pressing the camera button stops all alarm operation and the screen displays current picture.*
10	ARROW ▼▲◀▶	The arrow buttons act as the DOWN, UP, LEFT, and RIGHT buttons in Menu Setup mode, respectively. *NOTE: When alarms occur, pressing any arrow button stops all alarm operation and the screen displays current picture.*

2.2 REAR PANEL CONNECTIONS

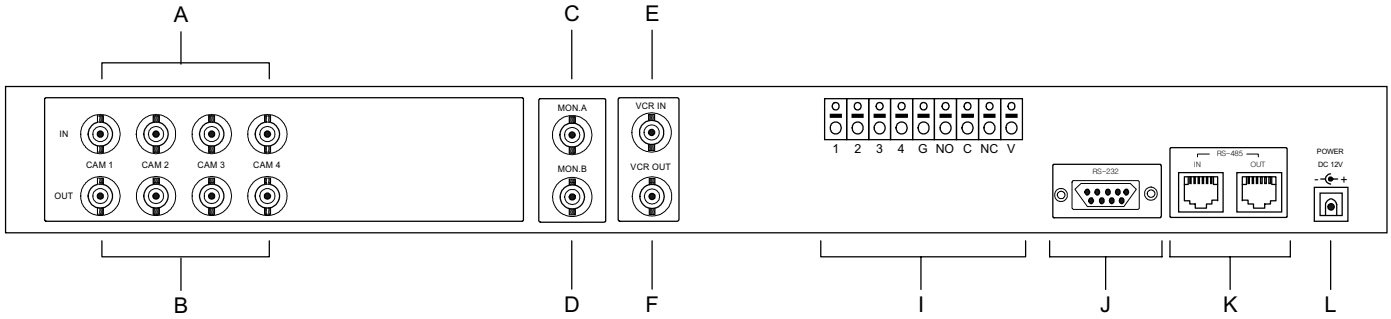

Figure 2: Rear Panel Connections

ID	Function	Description
A	Camera In	Accepts inputs from cameras.
B	Camera Out	Looping outputs for use with auxiliary equipment.
C	MON.A	This is the call output that can display Full screen, QUAD, or PIP images. Alarmed and zoomed images appear on this screen.
D	MON.B	Outputs QUAD or PIP screen display normally, or Full screen on alarm.
E	VCR IN BNC	Inputs from VCR for reviewing the tape and allows use of zoom feature.
F	VCR OUT BNC	Buffered MON.B for use with a VCR for recording.
G	Alarm In	These are alarming inputs, Normally Open or Closed, selectable in programming setup mode.
	Alarm Out	These are Form C dry relay contacts.
H	RS-232	9 pin D-Sub (female) for RS-232 remote control.
I	RS-485	RJ-45 8 pin modular jacks for RS-485 remote control.
J	POWER	This 2.1mm pin jack accepts 12V dc at 1.5A. The center pin is positive.

2.3 RS-485 CONNECTOR

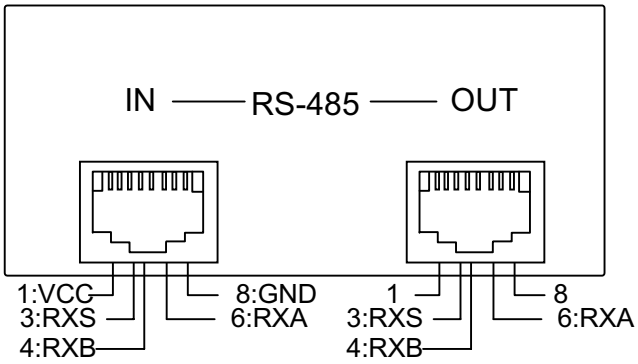

Figure 3: RS-485 Connections

2.4 REMOTE CONNECTOR PIN ASSIGNMENT

RS-232	PIN ASSIGNMENT	RS-485	PIN ASSIGNMENT
1	NO CONNECTION	1	VCC
2	RS-232 RX	2	NO CONNECTION
3	RS-232 TX	3	RXS
4	NO CONNECTION	4	RXB
5	GROUND	5	NO CONNECTION
6	NO CONNECTION	6	RXA
7	NO CONNECTION	7	NO CONNECTION
8	NO CONNECTION	8	GND
9	NO CONNECTION		

SECTION 3: INSTALLATION

3.1 BASIC INSTALLATION WITH A RECORDER

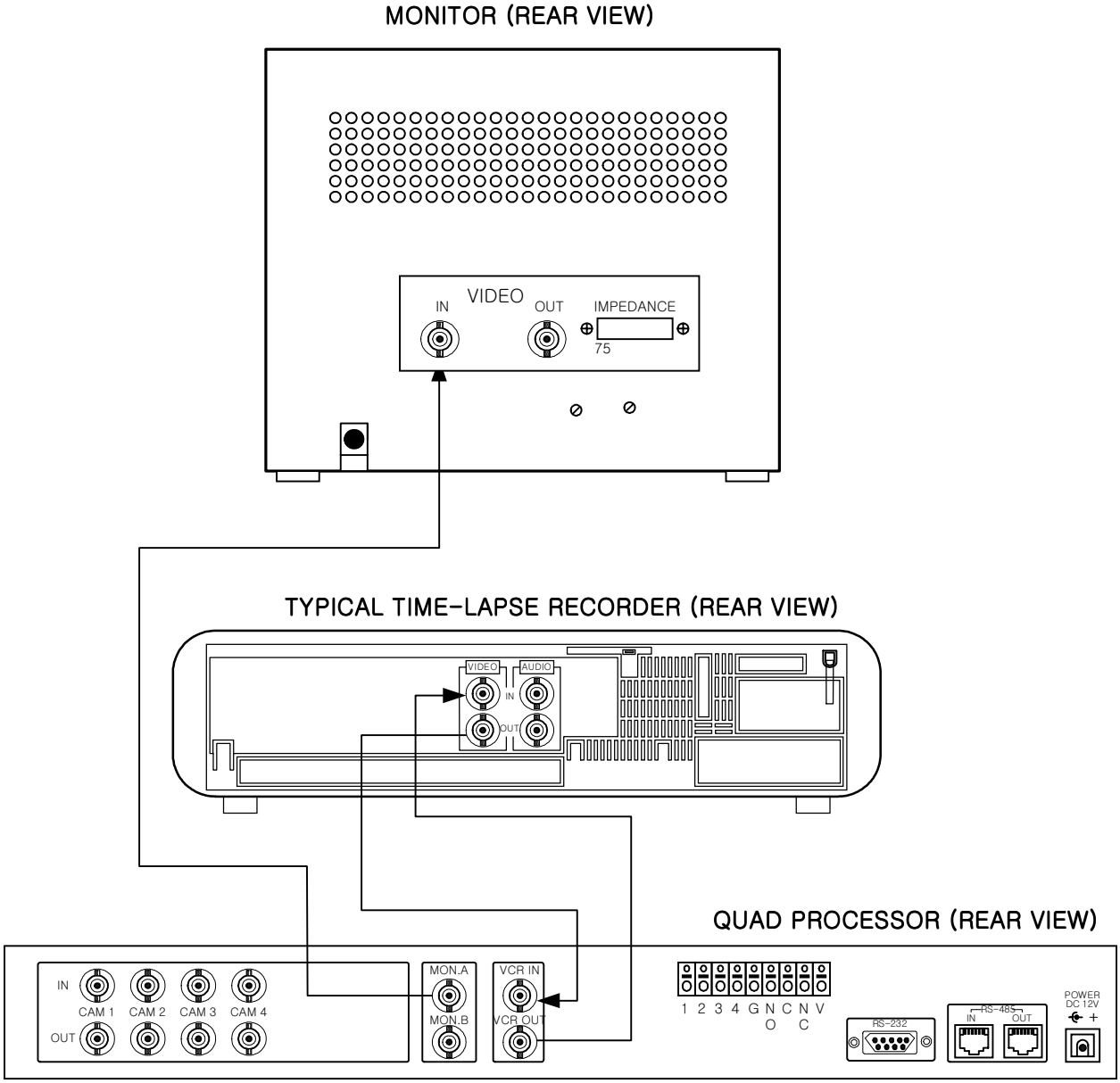

Figure 4: Basic Installation with a Recorder

SECTION 4: SETUP AND PROGRAMMING

4.1 DISPLAY FORMATS

PIP1 Display

Pressing the PIP1 button will display a full-screen " background" picture with a 1/9 size screen inset. PIP1 LED and the displaying camera LEDs are lit.

The default display format is a Full screen of Camera 1 with a lower-right 1/9 size Camera 2 inset. The unit stores the last PIP1 screen format.

Use the following table contents as a guide for the possible actions in the PIP1 mode.

Button(s)	Action
PIP1	Press **PIP1** again to move the Inset Screen position to the next position.
SEL + CAM (1-4)	<u>Camera Assign mode:</u> If **SEL** button is pressed, the SEL LED is lit and when a camera button is pressed, the " ASSIGN MODE" message is displayed on the screen. The first pressed camera number button is assigned to the background (main) picture, then its title is displayed and its LED turns on. Press another camera number button (except the already displaying main camera) to assign the inset picture (sub), then its title is displayed and its LED is lit. The SEL LED indicator turns off and the new PIP1 screen is displayed. *Note: Pressing SEL before the camera assign mode finishes will not change PIP1 screen display format.*
SEQ	<u>Sub Sequence mode:</u> Press **SEQ** to sequence the inset picture. The current inset camera LED and SEQ LED will turn on. Press SEQ again to stop the sequence. The SEQ LED turns off. In this mode, cameras not already displayed will be sequenced with a black screen.
SEL + SEQ	<u>Main Sequence mode:</u> Press **SEL** (the SEL LED is lights), then press **SEQ** to sequence the main picture. The changing main camera LED and SEQ LED are lit. Press SEQ again to stop the sequence and the SEQ LED turns off. In this mode, cameras not already displayed will be sequenced with a black screen.

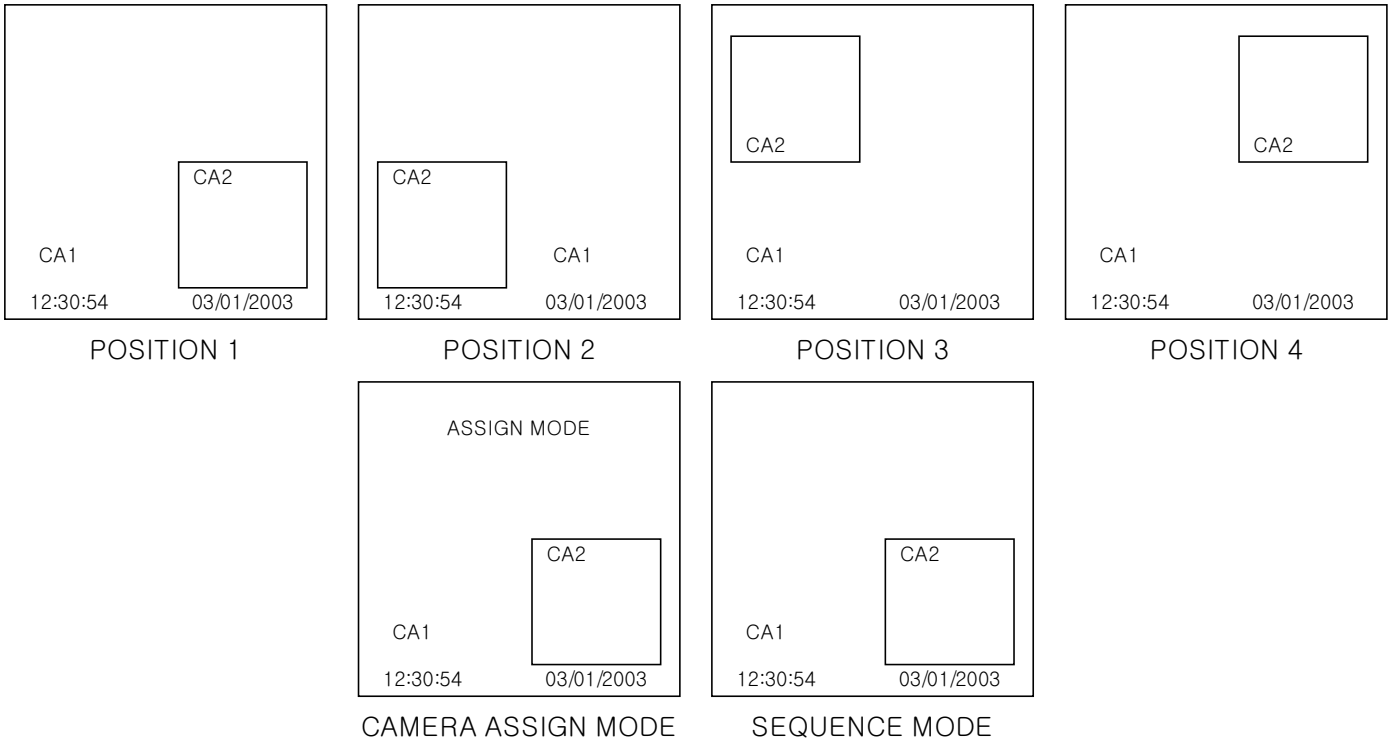

Figure 5: PIP1 Displays

PIP2 Display

Pressing the PIP2 button will display a full-screen " background" picture with two 1/9 size screen insets. PIP2 LED and the displaying camera LEDs are lit. The default display format is a Full screen of Camera 1 with two 1/9 size Camera 2 and 3 inset windows on bottom. The unit stores the last PIP2 screen format. Use the following table contents as a guide for the possible actions in the PIP2 mode.

Button(s)	Action
PIP2	Press PIP2 again to move the inset cameras to the next position.
SEL + CAM (1-4)	<u>Camera assign mode:</u> Press SEL to assign cameras. The SEL LED is lit and when a camera button is pressed, " ASSIGN MODE" message is displayed on the screen. The first pressed camera number button is assigned to the background (main) picture, then its title is displayed and its LED turns on. Press remaining two camera number buttons (except the already displaying main camera) to assign the two inset (sub) pictures. The titles of the selected cameras are displayed and the SEL LED indicator turns off and the new-assigned PIP2 screen is displayed. *NOTE: Pressing SEL before the camera assign mode finishes goes to the previous screen with no change.*

SEQ	<u>Sub Sequence mode:</u> Press **SEQ** to start the sequence of the lower-right inset camera. The LED of the current inset camera and SEQ LED turn on. Press SEQ again to stop the sequence and the SEQ LED turns off. In this mode, cameras not already displayed can be sequenced.
SEL + SEQ	<u>Main sequence mode:</u> Press **SEL** (the SEL LED lights), then **SEQ** to start the sequence of the main camera. The LED of the current main camera and SEQ LED turn on. Press SEQ again to stop the sequence and the SEQ LED turns off. In this mode, cameras not already displayed can be sequenced.

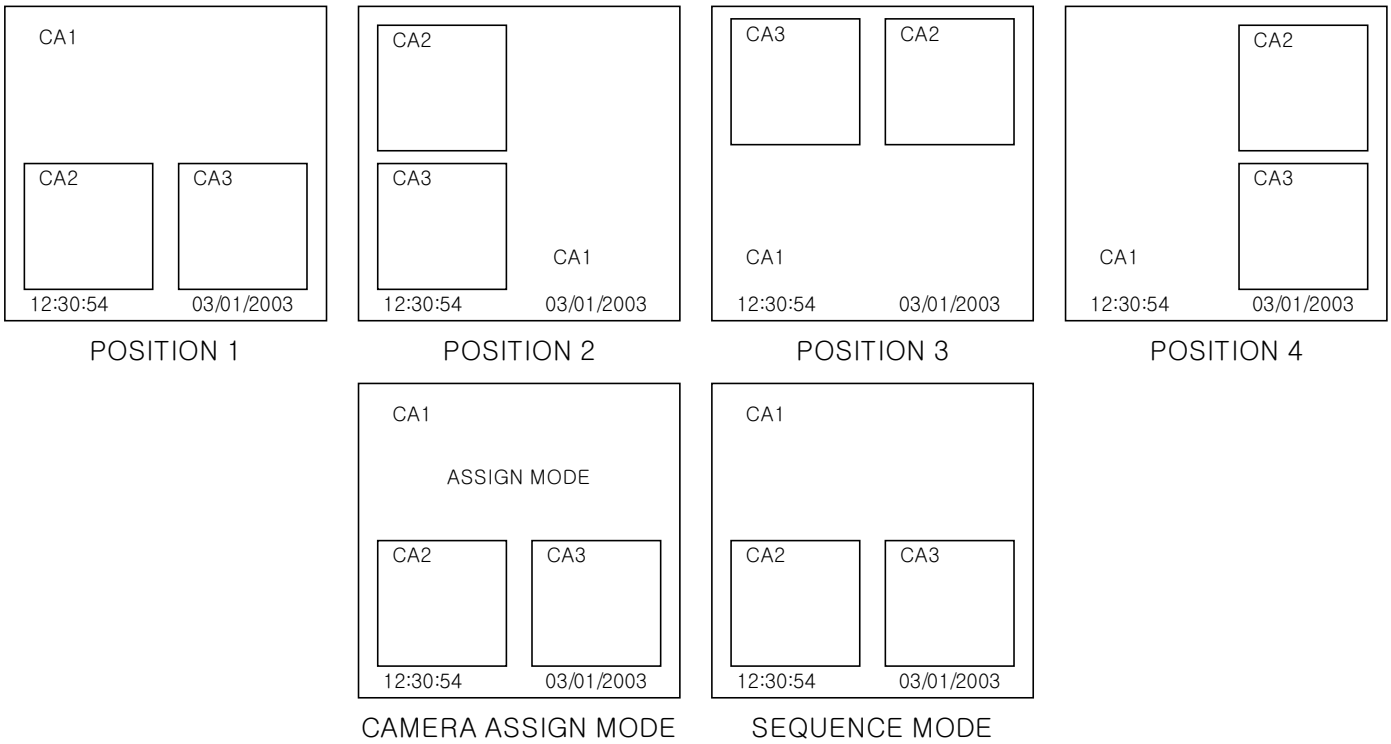

Figure 6: PIP2 Displays

QUAD Display

Pressing the QUAD button displays a QUAD screen with four camera windows. A black background is displayed for not installed or disabled cameras. The LEDs of the installed and enabled cameras and QUAD LED are lit. See the following table as a guide for the actions possible in the QUAD mode.

Button(s)	Action
SEL + CAM (1-4)	<u>Camera assign mode:</u> Press SEL to assign cameras. The SEL LED lights. When a camera button is pressed, the " ASSIGN MODE" message is displayed on the screen. The first pressed camera number button is assigned to the first quadrant, then its title is displayed and its LED turns on. Press the remaining three camera numbers for the remaining three quadrants in order of display (except already displayed cameras). Then the SEL LED indicator turns off and the new-assigned QUAD page is displayed. *NOTE: Pressing SEL before the camera assign mode finishes goes to the previous screen with no change.*
SEQ	Press SEQ to start the sequence of the camera. The camera LED and SEQ LED turns on. Press SEQ again to stop the sequence and the SEQ LED turns off.

Full Screen Display

Press any camera number button to change the display to the Full screen display mode of the camera. In this mode, the current displaying camera LED is lit.

Button(s)	Action
CAM (1-4)	Press camera number button to change the display to the Full screen display mode of the camera. *NOTE: The blue screen is displayed for any camera with no video signal.*
SEQ	Press SEQ to start the sequence of the camera. The camera LED and SEQ LED turns on. Press SEQ again to stop the sequence and the SEQ LED turns off.

SEQ Display

Pressing SEQ sequences the cameras in the order set in the Menu Setup. The displayed camera LED and SEQ LED are lit and a small " s" character is displayed on the screen.

If the dwell time in the Menu Setup is set to more than one second for any uninstalled camera or any disabled camera, the camera sequences with a black background in QUAD/PIP mode or with a blue background in Full-screen mode.

If the dwell time is set to OFF for any camera, the camera will be skipped in the sequence even if installed on the system and enabled. The dwell time for each camera can be set individually and sequence order can be set in the Menu Setup. Pressing SEQ again stops the sequential switching mode.

4.2 VCR OPERATION

The VCR mode allows you to view the video playing back through the VCR.

VCR Playback

After you pressed the PLAY button on the VCR, pressing the VCR button on the Color Quad Processor displays the VCR playback. In this mode, the VCR LED and QUAD LED are lit. When the unit is in VCR playback mode, you can freeze the screen by pressing the FREEZE button. The FREEZE LED will be lit and the QUAD LED will blink.

VCR Output

The VCR signal goes to the VCR BNC Output.

The VCR output is same as the MON.A output when the display mode is in QUAD or PIP mode.

To always record the QUAD screen, set ' QUAD' in the ' VCR OUTPUT' option menu.

The VCR output is the last QUAD or PIP display mode when the MON.A output is a Full screen display when ' VCR OUTPUT' option is set to QUAD/PIP mode.

VCR Zoom Display

The zoom display mode is enabled when the unit is only in the VCR playback mode. The zoom is a 2X zoom that expands one quarter of the screen to the Full screen. Pressing the camera button 1 ~ 4 places the unit into a zoomed picture and turns on the camera number LED and displays a character " Z" on the top of the screen.

NOTE: When the unit is in the VCR Loop Through, the VCR ZOOM mode is disabled and pressing camera buttons places the unit in the Full Screen Mode of the corresponding camera.

NOTE: When the unit is in the FREEZE mode or the VCR ZOOM mode, the MON.B output signal is same as MON.A output signal.

NOTE: Some VCR brands don't generate the standard video format signal in time laps playback mode. If you use these kinds of VCRs, you might see an abnormal picture on the top of the screen.

NOTE: There may be some signal-noise if the VCR stops playing the tape when the VCR PLAYBACK ZOOM option is ON.

Button(s)	Action
CAM (1 – 4)	Press a camera number button 1 ~ 4 to expand one quarter of the screen to Full screen. The camera LED turns on.
QUAD	Press the QUAD button to exit the ZOOM mode and go to the original picture screen. The camera number LED turns off and QUAD LED turns on.
FREEZE	Press the FREEZE button to freeze the current zoomed picture and display a blinking character " F" on the top of the screen. Then the FREEZE LED is lit.

4.3 FREEZE OPERATION

Freeze Display

Pressing **FREEZE** freezes the screen of the QUAD, PIP, or VCR playback mode. When the unit is in freeze mode, the FREEZE LED is lit and the frozen camera LEDs blink. A blinking " F" character is displayed and the image is frozen on the screen until the FREEZE button is pressed again or the corresponding camera button is pressed.

NOTE: In the QUAD/PIP mode, if FREEZE is pressed, the VCR and MON.B outputs are frozen.

NOTE: In the Full screen mode, FREEZE function is disabled.

MODE	Button(s)	Action
QUAD FROZEN	CAM (1-4)	Press the camera button of the frozen camera to unfreeze. The camera LED stops blink. To freeze the camera again, press the camera button again, then the camera LED blinks. If all cameras are unfrozen by pressing the camera buttons, the unit exits the Freeze mode.
	FREEZE	Press FREEZE to exit the FREEZE mode.
PIP FROZEN	CAM (1-4)	Press the camera button of the frozen camera to unfreeze. The camera LED stops blink. To freeze the camera again, press the camera button again, then the camera LED blinks. If all cameras are unfrozen by pressing the camera buttons, the unit exits the Freeze mode. Pressing the camera button not assigned in PIP mode exits FREEZE mode and the unit goes to the corresponding camera in the full screen.
	FREEZE	Pressing FREEZE exits the FREEZE mode.
VCR FROZEN	FREEZE	Pressing FREEZE exits the FREEZE mode.
VCR ZOOM FROZEN	FREEZE	Pressing FREEZE exits the FREEZE mode.
	QUAD	Pressing QUAD exits the FREEZE mode and ZOOM mode.

4.3 FREEZE OPERATION, CONTINUED

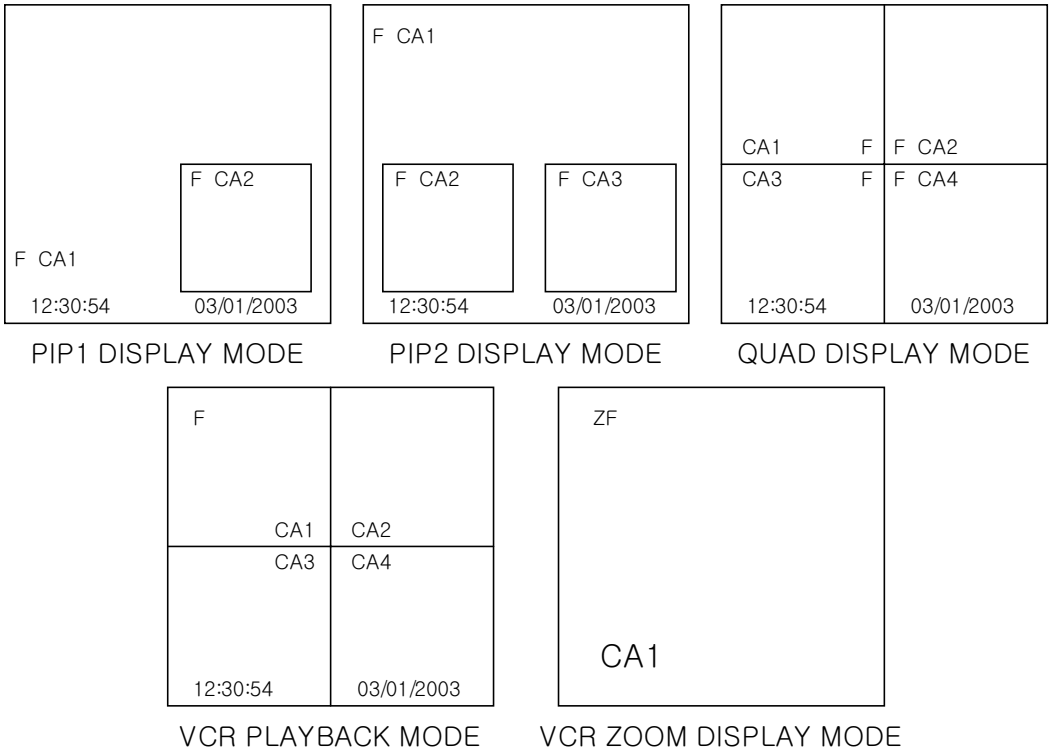

Figure 7: Freeze Displays

4.4 ALARM MODE

The quad processor has several alarm functions, including a single alarm, multiple alarms, VCR mode alarm and Video loss alarm. Each of these alarms will be explained in this section.

Single Alarm and Multiple Alarms

When alarms occur, the following actions are carried out.

1. The LED indicators of the alarmed cameras blink twice per second.
2. The alarm buzzer sounds if enabled.
3. The alarm relays are energized if enabled.
4. The blinking character "A" is displayed.
5. The monitor A, B and VCR outputs are switched to the selected display format set in the ALARM DISPLAY setup menu.
6. The unit exits the FREEZE mode, the VCR playback mode, or the VCR ZOOM mode.
7. All above actions are continued until the alarm is reset.
8. Pressing any button during alarm mode stops the buzzer sound only before the alarm has released, and by pressing the followed second button the unit goes to the corresponding button display mode.
9. When multiple alarms occur and the option is set FULL in Alarm Display Setup Menu, the outputs are switched between the alarmed cameras in numerical order automatically every two seconds.

The ALARM HOLD TIME can be set in the alarm time setup menu. The count starts after the alarm has been released.

The buzzer dwell time and the relay activation starts when an alarm is triggered and stops when the Alarm Hold Time has expired.

NOTE: When an alarm occurs, the FREEZE mode is canceled.

NOTE: The alarm is ignored for the camera with " DISABLE" option.

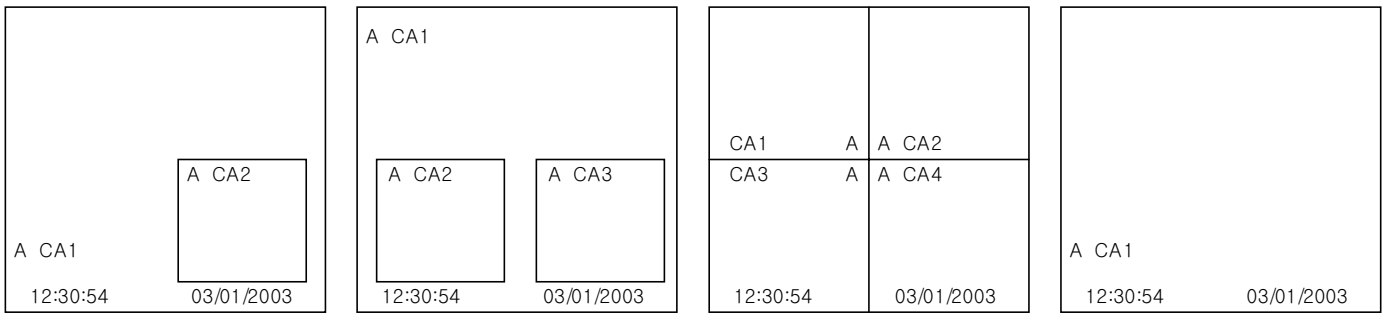

PIP1 DISPLAY MODE PIP2 DISPLAY MODE QUAD DISPLAY MODE FULL DISPLAY MODE

Figure 8: Alarm Mode Displays

VCR Mode Alarm

When an alarm occurs in the VCR playback mode, it exits the VCR playback mode and performs the alarm operation. When the Alarm Hold Time has elapsed, it goes to the previous VCR mode.

When an alarm occurs in VCR mode, the following actions occur:

1. The LED indicator of the alarmed camera blinks.
2. The alarm buzzer sounds, if enabled.
3. The alarm relay is energized, if enabled

Video Loss Alarm

The color QUAD can detect the loss of video signal for all connected camera inputs.

If the Video Loss Alarm has been set to OFF in the ALARM SETUP menu, then the loss of video signal is ignored. If the option is set to ON, the following actions occur:

1. The Display mode is changed to the QUAD mode.
2. The LEDs of the cameras with loss of video signal blink.
3. The relays are energized if option is enabled.
4. The alarm buzzer sounds if enabled.
5. The " L" messages blink next to the camera titles if the cameras with no video signal are displayed.
6. The last picture of the camera with video loss is frozen in the QUAD mode.

The dwell time of the video loss alarm is the same as the V-LOSS HOLD time in the alarm time setup menu. The V-LOSS HOLD time starts to count as soon as the unit detects no video signal.

The buzzer and the relay of Video loss start when the unit detects Video loss, and stop when the V-LOSS HOLD Time expires. The video loss output goes the logic level low during a video loss alarm. Pressing any button on video loss alarm stops the buzzer sound, turns off the relay and the LED of the camera with video loss. Then the unit goes to the corresponding display mode by any followed button. The blinking " L" message stops blinking but the " L" message remains until the unit detects the new valid video signal on the camera with video loss.

NOTE: The video loss alarm is ignored in the camera with " DISABLE" option.

NOTE: When a video loss alarm occurs for a camera not displayed on current screen, the unit goes to QUAD display mode, displaying that camera with a black screen.

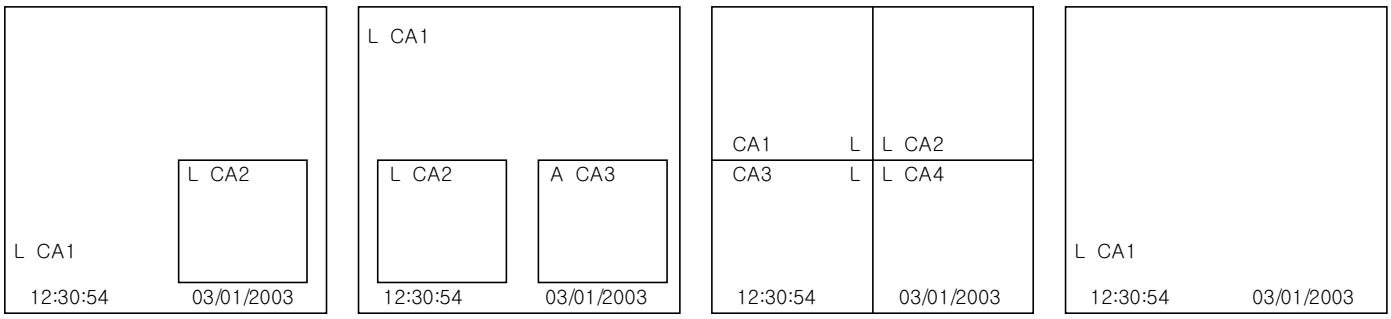

Figure 9: Alarm Mode Displays

4.4 ALARM MODE, CONTINUED

VCR Mode Video Loss Alarm

When a video loss alarm occurs in the VCR mode, the unit remains in the VCR playback mode.

When an alarm occurs in VCR mode, the following actions occur:

1. The LED indicator of the alarmed camera blinks.
2. The alarm buzzer sounds, if enabled.
3. The alarm relay is energized, if enabled.

Alarm Reset

The alarm action finishes when one of the following occurs:

- When the Alarm Hold Time has elapsed, that camera's alarm actions are terminated and the unit goes to the previous mode.
- When the V-LOSS HOLD time has elapsed, that camera's video loss alarm action is terminated.
- Press any button to cancel an alarm action manually and the unit goes to the corresponding button display mode by pressing another button.

4.5 CONNECTORS

Alarm Input

The unit has four alarm inputs. One alarm input is assigned to each camera input.

These inputs can be connected to any security device equipped with either a contact closure or TTL/CMOS standard alarm output. Alarm polarity can be selected for each input via the Alarm Input Setup menu.

Alarm input connections requires two wires. One wire connects to the desired alarm input pin. The second wire connects to the ground pin. If the alarm input for a camera has been turned OFF in the Alarm Input Setup menu, then the input is ignored.

Alarm Output

The unit has one alarm output that a Form " C" dry contact output. Normally open (N.O) and Normally closed (N.C) contacts with shared common.

Video loss Output

The unit has one Video-loss output. If the Video loss alarm occurs, the Video loss output is Logic level low.

SECTION 5: SETUP MODE

5.1 OVERVIEW

Pressing the MENU button places the unit into a programming mode.

Setup mode allows customization of the unit operation to suit a specific application. In the setup mode, the arrow buttons are used as DOWN, UP, LEFT and RIGHT buttons. When the unit comes out of the Setup menu, it returns to the previous display mode. In the menu mode, if any button is not pressed for two minutes, it will exit to the previous mode.

NOTE: In this mode, alarms and video-loss alarm detection is disabled.

5.2 PASSWORD

If the PASSWORD option is turned ON, pressing MENU displays the password confirmation screen. If the PASSWORD option is turned OFF, the password confirmation screen is bypassed and the MAIN MENU screen is displayed. The four-digit password must entered using the buttons for camera 1 through 4.

Example:
If your desired password is " 1 2 3 4" , press the keys CAM1, CAM2, CAM3, and CAM4.

Factory Default: 1 1 1 1

```
PASSWORD

ENTER PASSWORD
_ _ _ _

ENTER THE 4 DIGIT CODE
USING CAMERA KEYS (1-4)
```

Figure 10: Password Screen

If an incorrect password is entered, the screen displays an access denied message for two seconds and returns to the previous mode.

```
INCORRECT PASSWORD

ACCESS DENIED
```

Figure 11: Incorrect Password Message

5.3 MAIN MENU SETUP

The MAIN MENU provides access to all programming facilities.

See specific sections for information on each menu option.

```
MAIN MENU

1.LANGUAGE
2.TIME, DATE
3.CAMERA
4.ALARM
5.SEQ
6.PICTURE ADJUST
7.CONFIGURATION
```

Figure 12: Main Menu

The table below describes the programming functions and camera select controls.

Control	Description
MENU	From the main menu screen, exits the menu mode and return to the previous mode. Pressing this button while in a sub-menu returns to the upper menu screen.
SEL	Selects the setup option or enters the sub menu
△	Moves the cursor up or scrolls through the available options
▽	Moves the cursor down or scrolls through the available options
▷	Moves the cursor right
◁	Moves the cursor left
1 – 4	Enters a number from 1 to 4.

5.4 LANGUAGE SETUP (MAIN MENU OPTION 1)

From the MAIN MENU, select option 1 to go to the LANGUAGE setup menu.

Menu Language

The menu language option allows you to select the language on the displayed setup men.

The default setting is 1 (ENGLISH).

Available languages are English, French, German, Italian and Spanish.

Use the following steps to change this setting.

```
MENU LANGUAGE :  1

 1: ENGLISH
 2: FRENCH
 3: GERMAN
 4: ITALIAN
 5: SPANISH
```

Figure 13: Menu Language

Step	Action
1	Press △ or ▽ to select the desired language.
2	Press SEL. The selected option is saved and shows menu using the selected language.
3	Press MENU to return to the Main Menu.

5.5 TIME AND DATE SETUP (MAIN MENU OPTION 2)

From the MAIN MENU, select option 2 to go to the TIME, DATE setup menu.

Date Format

Date Format is used to select between the following three date formats:

- US
- EURO
- ASIA

```
        TIME, DATE

1.DATE FORMAT: US
2.DATE       : MM/DD/YYYY
3.TIME       : HH:MM:SS
4.DISPLAY    : ON
```

Figure 14: Time, Date Menu

Chose the correct format based on the following examples:

Format	Display	Example
US (NTSC default)	MM/DD/YYYY	09/18/2000
EURO (PAL default)	DD/MM/YYYY	18/09/2000
ASIA	YYYY/MM/DD	2000/09/18

Use the following steps to set the Date Format option.

Step	Action
1	Press △ or ▽ until Date Format is selected.
2	Press SEL to select Date Format.
3	Select the desired option using the △ or ▽ buttons.
4	Press SEL to save the value and move the cursor to Date Format.

5.5 TIME AND DATE SETUP (MAIN MENU OPTION 2), CONTINUED

Date

This field is used to set the current date. The format displayed on the screen is dependent on the date format option set in the preceding steps.

Use the following steps to set the current date.

Step	Action
1	Press △ or ▽ until Date is selected.
2	Press SEL to select the first two digits of the date. (four digits if Asia format is selected)
3	Press △ or ▽ to select the desired value.
4	Press △ or ▽ to move to next digits.
5	Repeat steps 3 and 4 until the desired date is set.
6	Press SET to save the value and move the cursor to Date.

Time

This field is used to set the time in a 24-hour format.
Use the same steps above for setting the time.

Display

The display option on the time and date setup screen allows you to select whether to display the time and date on the screen. Default is ON.

Change the display option using the following steps.

Step	Action
1	Press △ or ▽ until Display is selected.
2	Press SEL to select Display.
3	Press △ or ▽ to toggle between ON and OFF.
4	Press SEL to save the value and move the cursor to Display.

5.6 CAMERA SETUP (MAIN MENU OPTION 3)

From the MAIN MENU, select option 3 to go to the CAMERA setup menu.

The CAMERA setup menu is used to change the camera titles, set the camera disable/enable option and set PIP size.

```
CAMERA

1. CAMERA TITLES
2. CAMERA DISABLE
3. PIP SIZE:      1/9
```

Figure 15: Camera Menu

Camera Titles

The CAMERA TITLES menu is used to select display options for each camera when that camera is displayed, change the text displayed for each camera, and move the position of the titles.

Numbers 1-4 on the CAMERA TITLES setup screen are used to set each camera title. An 8-character title can be designated for each camera, and this title appears on the screen when the display option is ON and the camera is selected. The default camera title is " CA" with the corresponding number.

```
CAMERA TITLES
 1. CA1
 2. CA2
 3. CA3
 4. CA4
 5. DISPLAY: ON
```

Figure 16: Camera Title Menu

Following are the available characters for camera titles regardless of the language setting:

A B C D E F G H I J K L M N O P Q R S T U V W X Y Z
a b c d e f g h i j k l m n o p q r s t u v w x y Z
- . / 0 1 2 3 4 5 6 7 8 9 : = , ( ) BLANK

When selecting available characters, observe the following hints:

- Press △ to scroll one character at a time in ascending order.
- Press ▽ to scroll one character at a time in descending order.
- Hold down the △ or ▽ for two seconds to scroll through the characters automatically.
- Release the △ or ▽ buttons to stop scrolling.

5.6 CAMERA SETUP (MAIN MENU OPTION 3), CONTINUED

The following example provides steps for changing the title for Camera 1 from CA1 to " 1:LOBBY."

Step	Action
1	Press △ or ▽ until 1 is selected.
2	Press SEL to select the title.
3	Press △ or ▽ until the " 1" character is displayed.
4	Press ▷ to move the cursor to the right, then press △ or ▽ until the " :" character is displayed.
5	Press ▷ to move the cursor to the right, then press △ or ▽ until the " L" character is displayed.
6	Press▷ to move the cursor to the right, then press △ or ▽ until the " O" character is displayed.
7	Press ▷ to move the cursor to the right, then press △ or ▽ until the " B" character is displayed.
8	Press ▷ to move the cursor to the right, then press △ or ▽ until the " B" character is displayed.
9	Press ▷ to move the cursor to the right, then press △ or ▽ until the " Y" character is displayed.
10	Press SEL to save the title and move the cursor to 1.

The Display option on the CAMERA TITLES menu is used to select whether or not to display camera titles on the screen. Default is ON.

Change the display option using the following steps.

Step	Action
1	Press △ or ▽ until Display is selected.
2	Press SEL to select.
3	Press △ or ▽ to toggle between ON and OFF.
4	Press SEL to save the value and move the cursor to Display.

Camera Disable

The CAMERA DISABLE menu is used to disable a camera from the system (even if it is physically connected to the system).

When a camera is disabled, no action is taken on alarms.

Default value for all cameras is ENABLE.

```
CAMERA DISABLE

1.CAMERA 1: ENABLE
2.CAMERA 2: ENABLE
3.CAMERA 3: ENABLE
4.CAMERA 4: ENABLE
```

Figure 17: Camera Disable Menu

Step	Action
1	Press △ or ▽ until 1 is selected.
2	Press SEL to select the option.
3	Press △ or ▽ to toggle between ENABLE and DISABLE.
4	Press SEL to save the value and return the cursor to 1.
5	Repeat steps 1-4 until each camera value is set.
6	Press MENU to return to the CAMERA setup menu.

When a camera is disabled, in full screen mode, pressing the camera button for full screen viewing displays a blue screen with the title " DISABLED" if no camera is physically connected. If the camera is physically connected, a blue screen with no title is displayed.

When a camera is disabled in quad mode, a black quadrant with the title " DISABLED" will be displayed if no camera is physically connected. If the camera is physically connected, a black quadrant with no title is displayed.

When a camera is disabled, no action is taken on alarms.
The default value for all cameras is ENABLE.

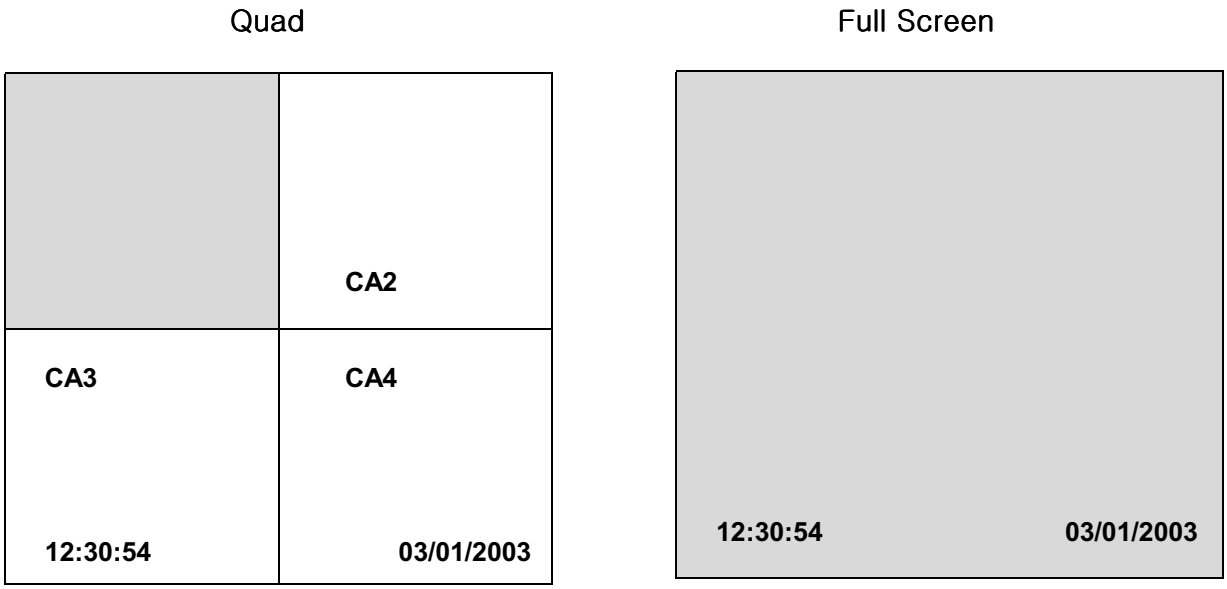

Figure 18: "DISABLED" cameras (camera physically attached to system)

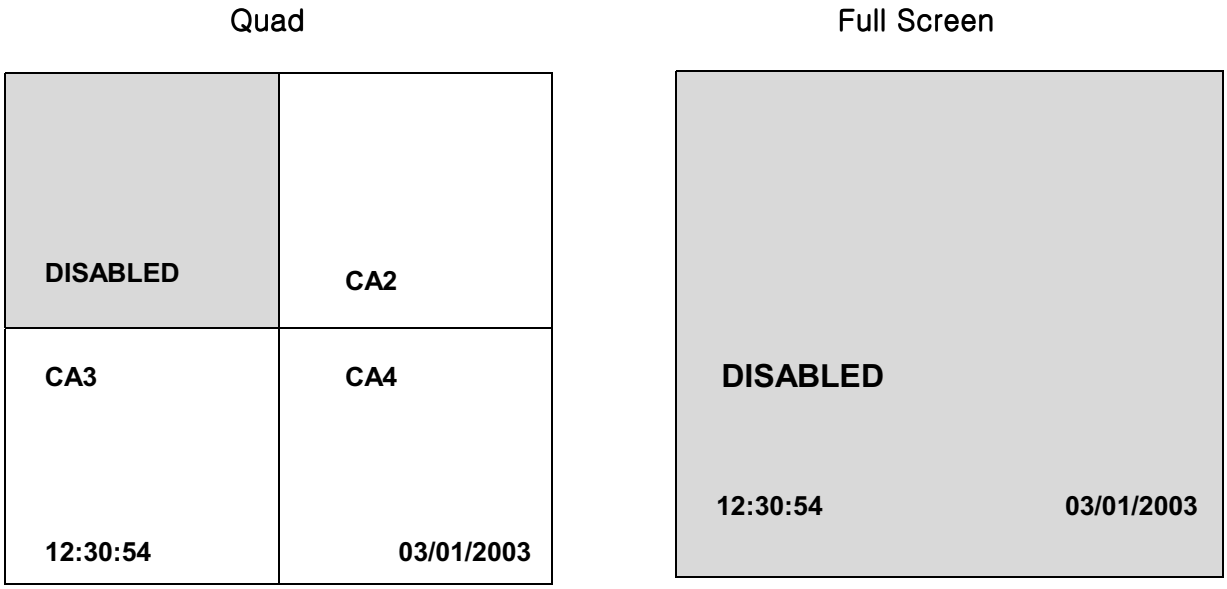

Figure 19: "DISABLED" cameras (camera not physically attached to system)

5.6 CAMERA SETUP (MAIN MENU OPTION 3), CONTINUED

PIP Size

The PIP size setup allows you to select the inset picture size in the PIP1 or PIP2 mode. (Default is 1/9 size.)

Step	Action
1	Press △ or ▽ until PIP SIZE option is selected.
2	Press SEL.
3	Press △ or ▽ to toggle between sizes (1/9 or 1/16).
4	Press SEL to save the value.

5.7 ALARM SETUP (MAIN MENU OPTION 4)

Alarm Menu

The ALARM setup screen is used to select alarm input, video loss alarm on/off, display on alarm, and alarm time.

```
ALARM

1.ALARM INPUT
2.VIDEO LOSS ALARM
3.ALARM DISPLAY
4.ALARM TIME
```

Figure 20: Alarm Menu

Alarm Input Menu

Alarm inputs define the way connectors respond to external input, in terms of whether they are normally open (NO), normally closed (NC), or if they ignore the input. The default is normally open (NO). The ALARM INPUT menu is used to set these options.

NOTE: Any alarm that occurs while in the setup mode is ignored.

```
ALARM INPUT

1. ALARM 1: N.O
2. ALARM 2: N.O
3. ALARM 3: N.O
4. ALARM 4: N.O
5. LATCH  : OFF
6. BUZZER : ON
7. RELAY  : ON
```

Figure 21: Alarm Input Menu

5.7 ALARM SETUP (MAIN MENU OPTION 4), CONTINUED

Input Options

The alarm numbers displayed on the screen allow you to change the alarm input options. Use the following steps to change the option for each camera:

Step	Action
1	Press △ or ▽ to move the cursor to the desired number.
2	Press SEL.
3	Use △ or ▽ to toggle between values: OFF: Alarm input is ignored. N.O: Unit looks for a short for alarm condition. N.C: Unit looks for an open for alarm condition.
4	Press SEL to save the change.
5	Repeat steps 1 through 4 for all other desired cameras as needed.

Latch

Latch is used to determine how long the alarm message will display in the main monitor.

Step	Action
1	Press △ or ▽ to move the cursor to Alarm Latch.
2	Press SEL.
3	Use △ or ▽ to toggle between value: ON: All alarm messages remain on screen and the LED indicators of alarmed cameras will blink until manually cleared by entering the setup menu. OFF: Each alarm message remains on screen until the alarm hold time expires or manually cleared by pressing any button. (Default setting.)
4	Press SEL to save the change and return the cursor to Alarm Latch.

5.7 ALARM SETUP (MAIN MENU OPTION 4), CONTINUED

Buzzer

The alarm buzzer option allows you to select whether the alarm buzzer is turned on or off. Use the following steps to change this option:

Step	Action
1	Press △ or ▽ to move the cursor to Alarm Buzzer.
2	Press SEL.
3	Use △ or ▽ to toggle between values: ON: Activates the alarm buzzer until the alarm hold time expires or the alarm is manually cleared by pressing any button. (Default setting.) OFF: Alarm buzzer does not sound.
4	Press SEL to save the change and return the cursor to Alarm Buzzer.

Relay

The alarm relay option is used to select whether the alarm relay is turned on or off. Use the following steps to change this option:

Step	Action
1	Press △ or ▽ to move the cursor to Alarm Relay.
2	Press SEL.
3	Use △ or ▽ to toggle between values: ON: Activates the alarm relay until the alarm hold time expires or manually cleared by pressing any button. (Default setting.) OFF: Turns the alarm relay off.
4	Press SEL to save the change and return the cursor to Alarm Relay.

Video Loss Alarm

The VIDEO LOSS ALARM menu is used to turn the video loss alarm ON or OFF for each camera when video input is lost.

```
VIDEO LOSS ALARM

1.CAMERA 1: ON
2.CAMERA 2: ON
3.CAMERA 3: ON
4.CAMERA 4: ON
5.LATCH   : OFF
6.BUZZER  : ON
7.RELAY   : ON
```

Figure 22: Video Loss Alarm Menu

Use the following steps to change this option.

Step	Action
1	Press △ or ▽ to move the cursor to Video Loss Alarm.
2	Press SEL.
3	Use △ or ▽ to toggle between values: ON: Executes video loss alarm operation during loss of video. (Default setting.) OFF: Ignores the loss of video.
4	Press SEL to save the change.
5	Repeat steps 1 through 4 for other cameras as needed.

Video Loss Alarm Latch

Latch is used to determine how long the video loss alarm message will display in the main monitor.

Step	Action
1	Press △ or ▽ to move the cursor to LATCH.
2	Press SEL.
3	Use △ or ▽ to toggle between values: ON: All video loss alarm messages remain on the screen and the LED indicators of alarmed cameras will blink until manually cleared by entering the setup menu. OFF: Each video loss message remains on screen until the V-LOSS time expires or is manually cleared by pressing any button. (Default setting.)
4	Press SEL to save the change and return the cursor to Video Loss Latch.

Video Loss Alarm Buzzer

The video loss buzzer is used to enable or disable the buzzer when the video loss alarm is set to ON. The buzzer sounds until the V-LOSS time expires, if enabled.

Use the following steps to change this option:

Step	Action
1	Press △ or ▽ to move the cursor to Video Loss Alarm Buzzer.
2	Press SEL.
3	Use △ or ▽ to toggle between values: ON: Sounds the buzzer until the V-LOSS time expires or is manually cleared by pressing any button. (Default setting.) OFF: Buzzer does not sound on video loss.
4	Press SEL to save the change and return the cursor to Alarm Buzzer.

Video Loss Alarm Relay

The Video Loss Alarm relay is used to select whether the relay is turned on or off. Use the following steps to change this option:

Step	Action
1	Press △ or ▽ to move the cursor to RELAY.
2	Press SEL.
3	Use △ or ▽ to toggle between values: ON: Activates the relay until the V-LOSS time expires or manually cleared by pressing any button. (Default setting.) OFF: Turns the alarm relay off.
4	Press SEL to save the change and return the cursor to Relay.

Alarm Display

The ALARM DISPLAY menu allows you to select the display format regardless of the video-loss alarm when the external alarm occurs.

When the VCR OUTPUT is selected with QUAD option, the unit does not allow the fact that MON.B displays FULL screen. (See below)

```
ALARM DISPLAY

DISPLAY     : 1

 MON.A      MON.B
1: FULL      QUAD
2: QUAD      QUAD
```

Figure 23: Alarm Input Menu when VCR Output is QUAD

```
ALARM DISPLAY

DISPLAY     : 2

 MON.A      MON.B
1: FULL      QUAD
2: FULL      FULL
3: QUAD      QUAD
```

Figure 24: Alarm Input Menu when VCR Output is QUAD/PIP

The default alarm display is 1. Change this option using the following steps:

Step	Action
1	Press △ or ▽ to move the cursor to the current option.
2	Press △ or ▽ to move to desired number.
3	Press SEL to save the change.
4	Press MENU to return to the previous menu.

5.7 ALARM SETUP (MAIN MENU OPTION 4), CONTINUED

Alarm Time

The ALARM TIME menu is used to set alarm hold time and video loss time.

```
ALARM TIME

1. HOLD TIME  : 20 SEC.
2. V-LOSS TIME: 20 SEC.
```

Figure 25: Alarm Time Menu

Hold Time

This option is used to set the amount of time that the alarm relay and alarm display continues after the alarm has released. Change this option using the following steps:

Step	Action
1	Press △ or ▽ to move the cursor to Hold Time.
2	Press SEL.
3	Use △ or ▽ to change the number of seconds. Hold time can be set from 0 to 99 seconds. (Default is 20 seconds.)
4	Press SEL to save the change and return to Hold Time.

V-Loss Time

V-loss time is used to set the amount of time that the video loss alarm relay, buzzer, and display continues after the unit detects the return of the video signal of the camera with video loss. Change this option using the following steps.

Step	Action
1	Press △ or ▽ to move the cursor to V-LOSS Time.
2	Press SEL.
3	Use △ or ▽ to change the number of seconds. Hold time can be set from 1 to 99 seconds. (Default is 20 seconds.)
4	Press SEL to save the change and return to V-LOSS Time.

5.8 SEQUENCE (MAIN MENU OPTION 5)

The SEQUENCE menu is used to select whether or not to display cameras in the sequential switching modes, and if so, specify the number of seconds each camera displays.

The order and dwell time in the full sequence option applies to the PIP sequence display mode.

```
        SEQUENCE

ORDER          DWELL
1:    CA1      03 SEC.
2:    CA2      03 SEC.
3:    CA3      03 SEC.
4:    CA4      03 SEC.
5:    QUAD     OFF
```

Figure 26: Sequence Menu

Order

Order is used to select the switching order in the sequential switching modes. A camera is able to be set more than once in the sequence order.

Step	Action
1	Press △ or ▽ to move the cursor to desired Order number.
2	Press SEL.
3	Use △ or ▽ to select the new camera/view.
4	Press SEL to save the change.
5	Repeat steps 1 through 4 for all other change as needed.

Dwell Time

Dwell Time is used for the sequential switching mode for each camera. Valid dwell times are from 00 to 99 seconds. (Default is 03 seconds.) If 00 second is selected, the word OFF is displayed on the screen.

NOTE: Cameras that have a dwell time set to OFF will be excluded from the switching sequence even if they are connected to the system. Cameras with dwell time from 01-99 seconds will be displayed.

Step	Action
1	Press △ or ▽ to move the cursor to desired number.
2	Press SEL.
3	Press △ or ▽ to select the new value.
4	Press SEL to save the change.
5	Repeat steps 1 through 4 for all other changes as needed.

5.9 PICTURE ADJUST (MAIN MENU OPTION 6)

The PICTURE ADJUST menu is used to modify the picture quality of the selected camera.

Camera Select

Select the quadrant camera for adjusting the picture quality using the following steps:

Step	Action
1	Press △ or ▽ to move the cursor to the desired page.
2	Press SEL to change the picture quality and the screen goes to the control menu OR press MENU to return to the previous menu.

CA1	
1.QUADRANT 2.BRIGHTNESS 3.CONTRAST 4.COLOR 5.TINT	: 1 : -01 : MIN : MAX : +03

Figure 27: OSD when Adjusting quadrant 1

1.QUADRANT 2.BRIGHTNESS 3.CONTRAST 4.COLOR 5.TINT	:3 :00 :00 :00 :00
CA3	

Figure 28: OSD when Adjusting Camera 3

Picture Adjust

This menu allows you to adjust the level for brightness, contrast, color and tint of the selected camera. These levels are controlled by 64 steps from MIN to MAX. 00 means the normal value. The default setting is 00. Change the value for picture control using the following steps.

Step	Action
1	Press △ or ▽ to move the cursor to the desired item.
2	Press SEL to select the item for change.
3	Press △ or ▽ to change the value.
4	Press SEL to save the value and return the cursor to the item.
5	Repeat steps 1 through 4 for all other desired setting.
6	Press the MENU button to go to upper menu

NOTE: *TINT is only available on the NTSC model.*

5.10 CONFIGURATION (MAIN MENU OPTION 7)

The CONFIGURATION menu is used to make changes to the security options. Use this screen, to set up password confirmation, security codes, factory defaults, protection against unauthorized operation, VCR input, remote control.

```
CONFIGURATION

1. PASSWORD          : OFF
2. ENTER NEW CODE    : _ _ _ _
   RE-ENTER NEW CODE: _ _ _ _
3. FACTORY DEFAULT   : NO
4. KEY LOCK          : OFF
5. VCR OUTPUT        : QUAD
6. REMOTE CONTROL
7. ALARM HISTORY
8. SYSTEM            : NTSC
```

Figure 29: Configuration Menu

Password

The PASSWORD option is used to protect programming setup from unauthorized access.

If set to ON, pressing MENU to enter the main menu setup mode will display the password confirmation screen.

Step	Action
1	Press △ or ▽ to move the cursor to PASSWORD.
2	Press SEL.
3	Press △ or ▽ to toggle between ON and OFF.
4	Press SEL to save the value and return the cursor to Password.

Changing The Password

The Enter New Code and Re-enter New Code fields are used to change the password for the unit. Use the following steps to change the password.

Step	Action
1	Press △ or ▽ to move the cursor to ENTER NEW CODE.
2	Press SEL to select the first digit of the password.
3	Enter four digits for the new password using the camera number buttons 1 through 4.
4	The first digit (-) of the RE-ENTER NEW PASSWORD field is automatically selected once all four digit of the password are entered.
5	Re-enter the same password as entered above and press SEL.
6	If the password code change was successful, a " CHANGE PASSWORD SUCCESS" message is displayed for two seconds and the cursor is placed at the ENTER NEW CODE menu-item automatically. If the password code change was not successful, a " CHANGE PASSWORD FAIL" message is displayed for two seconds and the cursor is placed at the ENTER NEW CODE menu-item automatically. If this occur, repeat the same steps.

CHANGE PASSWORD

SUCCESS

Figure 30: Change Password Success

CHANGE PASSWORD

FAIL

Figure 31: Change Password failure

Factory Defaults

This Factory Default setting is used to reset all values to factory-defined defaults. The default setting is NO.

Warning: *This action erases all user settings and cannot be undone.*

Use the following steps to reset the unit to factory defaults.

Step	Action
1	Press △ or ▽ to move the cursor to FACTORY DEFAULT.
2	Press SEL. A warning message displays: WARNING THIS WILL CHANGE ALL USER SETTINGS TO THE FACTORY DEFAULT.
3	To continue with resetting factory values, use △ or ▽ to select YES. To cancel this action, press MENU.
4	Press SEL to continue resetting factory values. A message displays indicating that values have been reset. FACTORY DEFAULT IS DONE.

5.10 CONFIGURATION (MAIN MENU OPTION 7), CONTINUED

Key Lock

Key Lock is used to protect the control buttons against illegal operation.

Use the following steps to set the key lock option:

Step	Action
1	Press △ or ▽ to move the cursor to KEY LOCK.
2	Press SEL.
3	Press △ or ▽ to toggle between the settings: ON: The front panel is inoperable. Pressing MENU will place the unit into the MAIN MENU setup mode. OFF: The front panel is operable. (Default)
4	Press SEL to save the setting and move the cursor to the Key Lock option.

VCR Output

The VCR output option selects QUAD or QUAD/ PIP mode.

Use the following steps to change the option:

Step	Action
1	Press △ or ▽ to move the cursor to VCR OUTPUT.
2	Press SEL.
3	Press △ or ▽ to toggle between the settings: QUAD: The VCR output and MON.B are always Quad mode. (This means that the unit does not use PIP display function anymore) QUAD/PIP: The VCR can display and record both QUAD and PIP.
4	Press SEL to save the setting.

Remote Control

The REMOTE CONTROL menu allows you to set the UNIT number and Data rate.

```
REMOTE CONTROL

1. UNIT NUMBER: 01
2. TYPE: RS485
3. DATA RATE: 1200BPS
```

Figure 32: Remote Control Menu

Use the following steps to set the Unit Number.

Step	Action
1	Press △ or ▽ to move the cursor to UNIT NUMBER.
2	Press SEL.
3	Press △ or ▽ to select a value between 01 and 99. (Default is 01.)
4	Press SEL to save the setting and return to UNIT NUNBER.

Use the following steps to set the Type.

Step	Action
1	Press △ or ▽ to move the cursor to TYPE.
2	Press SEL.
3	Press △ or ▽ to toggle between the RS-232 and RS-485. (Default is RS-485)
4	Press SEL to save the setting and return to TYPE.

Use the following steps to set the Data Rate.

Step	Action
1	Press △ or ▽ to move the cursor to DATA RATE.
2	Press SEL.
3	Press △ or ▽ to select the setting. Valid settings are 1200BPS, 2400BPS, 4800BPS and 9600BPS. (Default is 1200BPS.)
4	Press SEL to save the setting and return to DATA RATE.

Alarm History

Alarm History is used to display the history for up to 120 alarm events. The history data including alarm source, camera number, time and date is displayed in 10 different pages. The alarm history is kept in a cyclic log. The last alarm events are recorded with the oldest alarm event being deleted when triggered again.

There are two different sources:

" A" means that the alarm was triggered by the external alarm sensor.

" L" means that the alarm was triggered by the loss of the video signal from the camera input.

Use the following steps to display the alarm history for each alarm and restart the alarm history for all cameras:

Step	Action
1	Press △ or ▽ to move the cursor to ALARM HISTORY.
2	Press SEL.
3	Press △ to display the next page or press the SEL to clear all pages.
4	Press MENU to exit this menu and return to the CONFIGURATION menu.

```
      ALARM HISTORY       PAGE1
A CA1    12:05:36    10/30/2000
L CA3    13:05:36    10/29/2000
L CA2    14:05:36    10/28/2000
A CA2    15:05:36    10/27/2000
A CA3    16:05:36    10/26/2000
L CA4    17:05:36    10/25/2000
A CA1    18:05:36    10/24/2000
A CA4    19:05:36    10/23/2000
A CA3    20:05:36    10/22/2000
A CA1    21:05:36    10/23/2000
A CA3    21:22:31    10/22/2000
A CA2    22:07:07    10/21/2000
       PRESS SEL TO CLEAR
```

Figure 33: Alarm History Displayed

```
ALARM HISTORY      PAGE1

     / NO ALARM /

PRESS SEL TO CLEAR
```

Figure 34: Alarm History Cleared

System

This option is used to assign the system format of the video signal.

Note: This option is not changed by the factory default operation.

Note: At power ON, this unit checks the system format of camera 1.
It operates as follows:

1. *If the system format of the camera 1 is not same as this option value, it changes this option value to the system format of camera 1.*

2. *If camera 1 is not installed, this unit displays with the system format of this option value.*

Step	Action
1	Press △ or ▽ to select SYSTEM.
2	Press SEL.
3	Press △ or ▽ to select between NTSC and PAL.
4	Press SEL to save.

SECTION 6: REMOTE CONTROL

6.1 OVERVIEW

The unit provides methods of remote control using the rear panel REMOTE connector: RS-232 data, RS-485 data.

RS-232 and RS-485 Data

The RS-232 and RS-485 data remote features allow the unit to be controlled from a computer or ASCII communications terminal. The unit recognizes a group of three characters as a remote button press command. Each command represents a single button press.

The RS-232 remote pin is an input only. The RS-485 pin (RXA, RXB) is used only to receive data. The unit does not echo commands or output data of any type.

WARNING: Only one serial communication method should be used between RS-232 and RS-485.

RS-232 Connection

RS-232 remote connection requires two wires. One wire connects to the RS-232 pin (PIN 2) and the other connects to the ground pin (PIN 5).

RS-485 Connection

RS-485 remote control is through a RJ-45 connector on the rear panel.

RS-485 remote connection requires two wires. One wire connects to the RS-485 RXA and the other connects to the RS-485 RXB. And the RXS and RXB should be connected externally. But if the user connects more than two units, the user should have only one unit that has RXS and RXB connected externally.

NOTE: Twist the wires together to help eliminate noise from the signal.

Communication Protocol

The communication protocol supported by this unit is as follows:

- Data rate: 1200bps, 2400bps, 4800bps, 9600bps (Selectable)
- Characters: 8
- Parity: None
- Stop bits: 1

6.2 REMOTE COMMAND SET

The following remote commands consist of three ASCII characters. All commands, except unit number commands, begin with the forward slash (/) character. The two characters following the slash identify the command. The following table lists each valid command and the button press it represents.

FUNCTION	COMMAND
MENU button	/MU
SEL button	/SL
VCR button	/VR
QUAD button	/QU
SEQUENCE button	/SQ
FREEZE button	/FR
PIP1 button	/P1
PIP2 button	/P2
CAMERA 1~4 button	/01~/04
QUAD mode	/Q1
UP button	/UP
DOWN button	/DN
LEFT button	/LT
RIGHT button	/RT
Freeze Mode	/FM
Unfreeze Mode	/UM
Unit Number	#00 ~#99

The unit responds to all commands after power on. If the unit receives the Unit Number command, the unit compares the received unit number command with itself in the menu setup.

Upon receiving the wrong unit number, the unit does not operate any command until it receives a Unit Number command which matches the one assigned in the setup menu.

6.3 REMOTE CONNECTIONS

RS-232

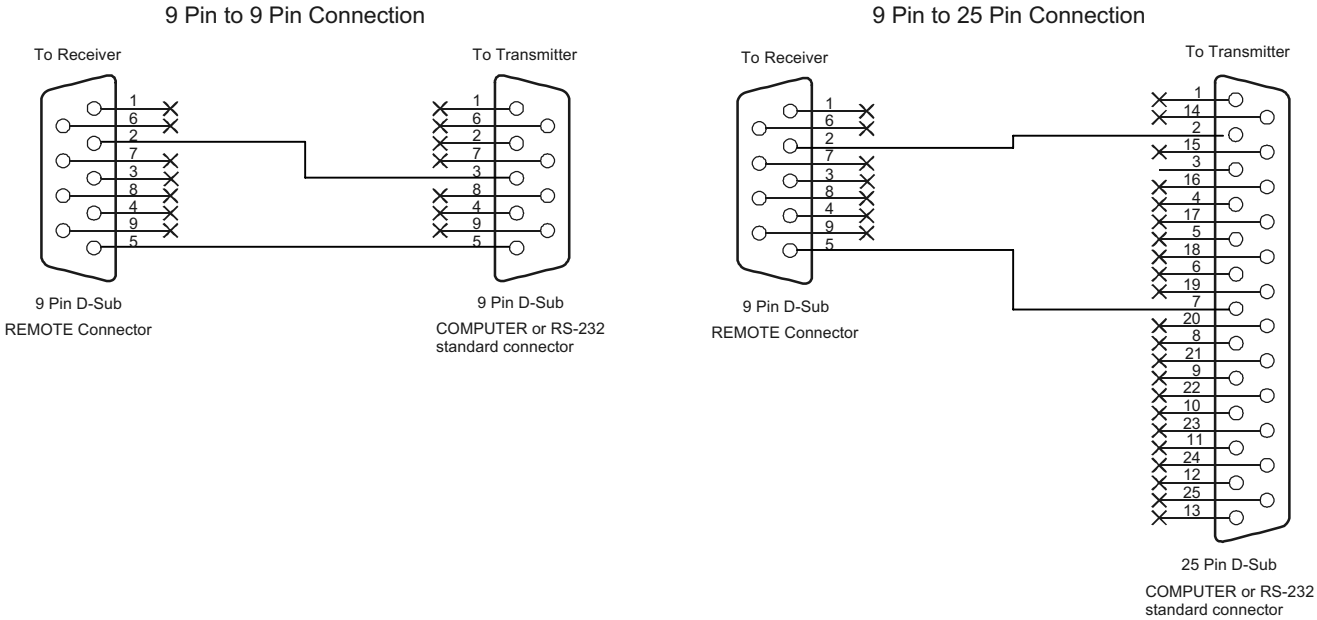

Figure 35: RS-232 Connection

RS-232 Transmitting Connector Pin Name

RS-232 Pin Name	Pin No. (25 Pin D-Sub Connector)	Pin No. (9 Pin D-Sub Connector)
TXD	3	3
RXD	2	2
RTS	4	7
CTS	5	8
DSR	6	6
GND	7	5
DCD	8	1
DTR	20	4

RS-485

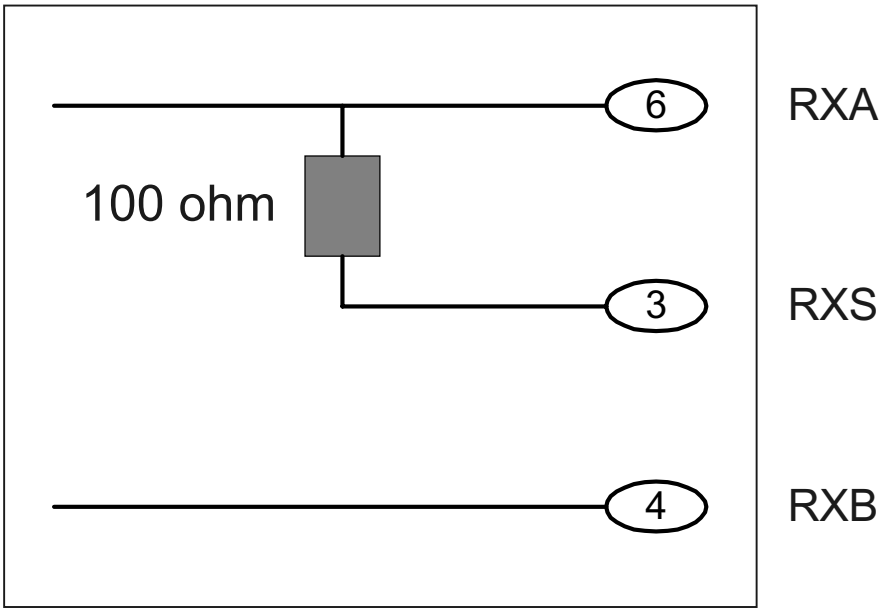

Figure 36: RS-485 Connection

SECTION 7: TROUBLESHOOTING AND MAINTENANCE

7.1 TROUBLESHOOTING

If you experience difficulties operating the monitor, refer to the following. If the guidelines do not enable you to solve the problem, contact an authorized technician.

Problem	Check
No video	● Verify that there is power to all system equipment. ● Verify that the power switches are in the ON position. ● Verify that the lens caps have been removed from the camera lenses or that the iris of each lens is open.
Video, but No control	● Power down the system. Wait for one minute, then turn the power back on.

7.2 PREVENTIVE MAINTENANCE

Following the preventive maintenance schedule allows detection and correction of minor faults before they become serious and cause equipment failure.

Periodically perform the following:

1. Inspect all connecting cables for deterioration or other damage.

2. Clean components with a clean damp cloth.

3. Verify that all the mounting hardware is secure.

SECTION 8: SPECIFICATION

8.1 GENERAL

Display Format	Quad Screen Display
Power Requirement	12V DC / 1.5A
Dimensions	17.5W x 1.73H x 13.1D inches (444.5W x 44H x 334D mm)
Weight	5.17 lbs (2.3 Kg)
Ambient Temperature	32°F to 95°F (0°C to 35°C)
Ambient Humidity	10% to 90% (non-condensing)

8.2 ELECTRICAL

Signal Format	NTSC: 525 lines / PAL: 625 lines, 2:1 Interlace
Video Inputs	1.0 Vp-p 75 Ohm, BNC(×4)
Video Outputs	BNC with switch for changing input impedance automatically. Composite video output from camera (passive loop through).
VCR Input	1.0 Vp-p, 75 Ohm
VCR Output	1.0 Vp-p, 75 Ohm, BNC
Monitor A Output	1.0 Vp-p, 75 Ohm unbalanced, BNC, OSD
Monitor B Output	1.0 Vp-p, 75 Ohm unbalanced, BNC, OSD
Pixel Resolution	720 x 480 pixels (NTSC) / 720 x 576 pixels (PAL)
Shades of Gray	256
Colors	16.7 Million
Display Rate	Real Time Refresh Rate (60/50 Field Per Second Per Quadrant)
Alarm Inputs	Normally Open or Normally Closed (Programmable), Terminal Strip
Alarm Outputs	Form C Dry Contact, Terminal Strip
Video Dwell	OFF, 01 to 99 seconds programmable
Video Loss Alarm	OSD Display (“ L”), Buzzer, and Relay
Freeze Annunciation	OSD Display (“ F”)
Annunciation	Alarm Buzzer (On/Off)
Camera Titles	Eight characters per Camera

8.3 ALARM

Camera Alarm Input	Four inputs with individual polarity selection. Activated by contact closure or TTL/CMOS signal
Alarm Output	Two N.O and N.C contacts with shared common. 1.0A at 24 VDC (resistive only)
Alarm Hold Time	20 seconds (default). Programmable 00 to 99 seconds.
Alarm Buzzer	On/Off programmable
Relay	On/Off programmable

8.4 FACTORY DEFAULTS

Menu Language	ENGLISH
Time/date Display	ON
Date format	NTSC: US (MM/DD/YY), PAL: EURO (DD/MM/YY)
Camera Titles	ON (CA1 ~ 4)
Camera Disable	All Enable
Quadrant Assign	Q1: CA1, Q2: CA2, Q3: CA3, Q4: CA4
Alarm Input Polarity	N.O (Normally Open)
Alarm Display	1 (MON.A : FULL, MON.B/VCR : QUAD)
Alarm Buzzer	ON
Alarm Hold Time	20 seconds
Alarm Latch	OFF
Alarm Relay	ON
Video Loss Alarm	ON
Video Loss Latch	OFF
Video Loss Time	20 seconds
Video Loss Relay	ON
Sequence Order	CA1, CA2, CA3, CA4
Dwell Time	3 seconds (Except QUAD : OFF)
Password	OFF
Password Code	1 1 1 1
Key Lock	OFF
Factory Default	NO
VCR Output	QUAD/PIP
Data Rate	1200bps
Unit Number	01

MEMO

MEMO

4 CHANNEL
COLOR QUAD PROCESSOR

50301641A